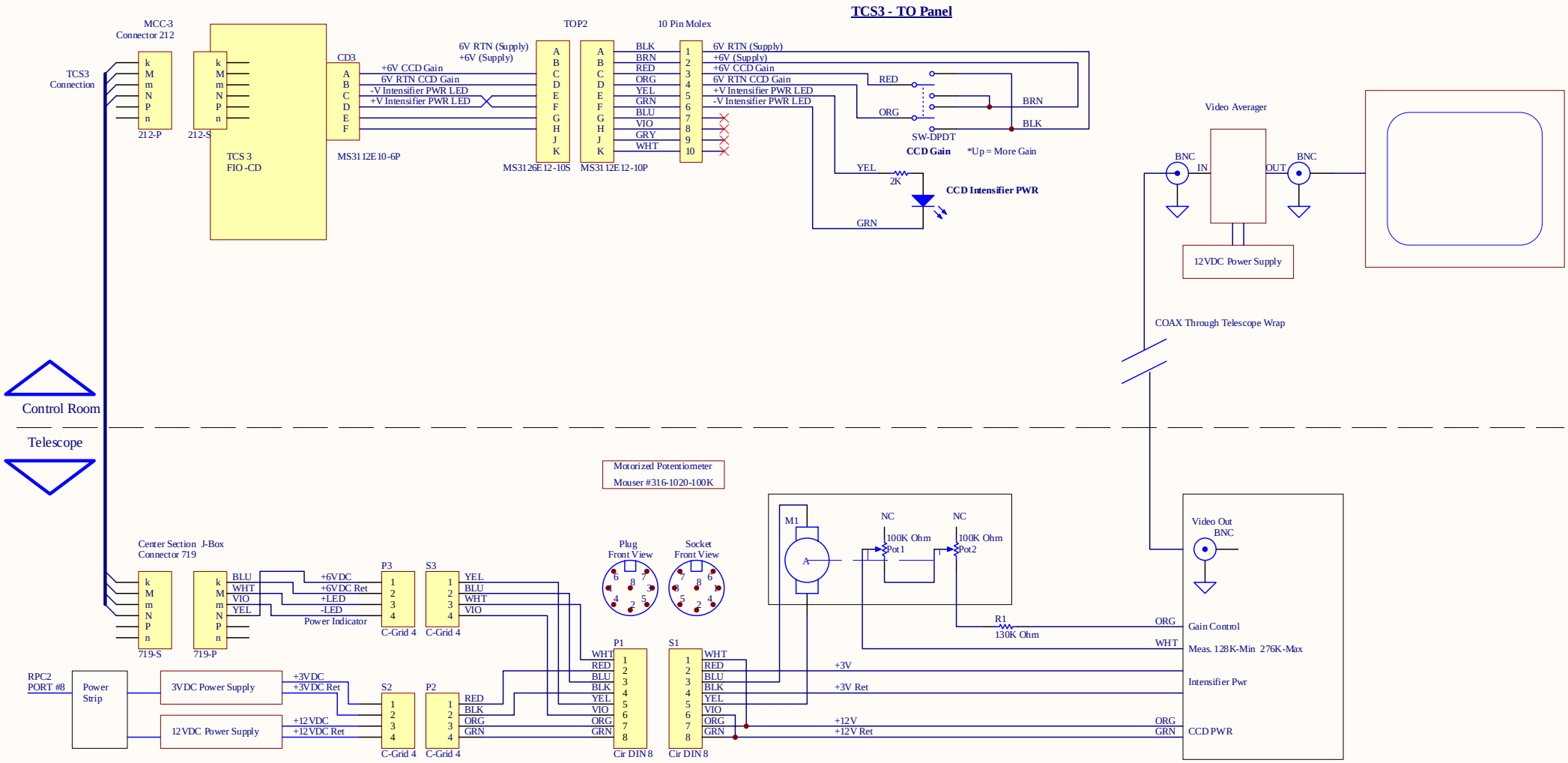
TCS3 - TO Panel
MCC-3
Connector 212
TCS3
Connection
212-P
212-S
TCS 3
FIO -CD
CD3
+6V CCD Gain
6V RTN CCD Gain
-V Intensifier PWR LED
+V Intensifier PWR LED
MS3112E10-6P
6V RTN (Supply)
+6V (Supply)
TOP2
MS3126E12-10S
MS3112E12-10P
10 Pin Molex
BLK
BRN
RED
ORG
YEL
GRN
BLU
VIO
GRY
WHT
SW-DPDT
CCD Gain
*Up = More Gain
2K
CCD Intensifier PWR
Video Averager
BNC
IN
OUT
12VDC Power Supply
COAX Through Telescope Wrap
Control Room
Telescope
Motorized Potentiometer
Mouser #316-1020-100K
M1
NC
100K Ohm
Pot1
Pot2
Center Section J-Box
Connector 719
719-S
719-P
+6VDC
+6VDC Ret
+LED
-LED
Power Indicator
P3
S3
C-Grid 4
Plug
Front View
Socket
Front View
R1
130K Ohm
Video Out
Gain Control
Meas. 128K-Min 276K-Max
Intensifier Pwr
CCD PWR
+3V
+3V Ret
+12V
+12V Ret
RPC2
PORT #8
Power
Strip
3VDC Power Supply
12VDC Power Supply
+3VDC
+3VDC Ret
+12VDC
+12VDC Ret
S2
P2
P1
S1
Cir DIN 8
Sanyo CCD and Intensifier
Wall Transformer Type Power Suppplies
3 VDC 700mA Regulated
Radio Shack #273-1756
6 VDC 300mA Filtered
Radio Shack #273-1758
12 VDC 500mA Filtered
Radio Shack #273-1652D
Title
COLLINS ON-AXIS CAMERA
Size
B
Number
OnAxisCam.SCHDOC
Revision
Date:
11/3/2006
Sheet of
File:
Y:\PUBLIC_HTML\..\ONAXISCAM.SCHDOC
Drawn By: