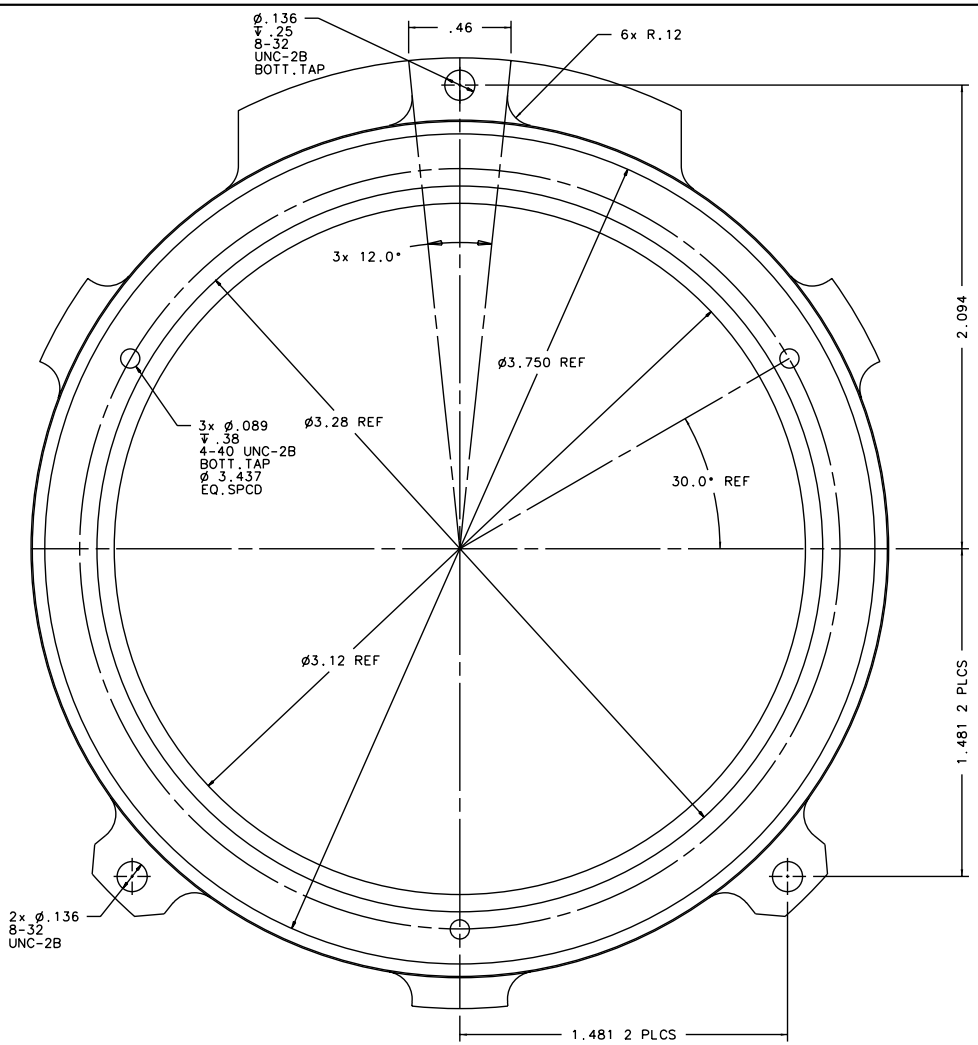

BACK

BILL OF MATERIAL

ITEM	Q'TY	DRW. NO.	DESCRIPTION	MATERIAL

	TOLERANCES UNLESS OTHERWISE NOTED	DRAWING NUMBER AOK-291-2		INSTITUTE FOR ASTRONOMY 2680 WOODLAWN DR. HONOLULU, HI 96822
NEXT ASSY	X.X ±0.02	DATE: 01/23/02	NAME: LENS CELL3 INSTRUMENT: IRTF AO TELESCOPE: NASA IRTF	
AOK-290	X.XX ±0.005	DESIGN: VERN S		
	X.XXX ±0.001	JOS #: 948	SIZE: B	REVISION DATE: REV_DATE
	∠ ±0.5°	MFG:	SCALE: 2:1	SHEET NO. 2 OF 3