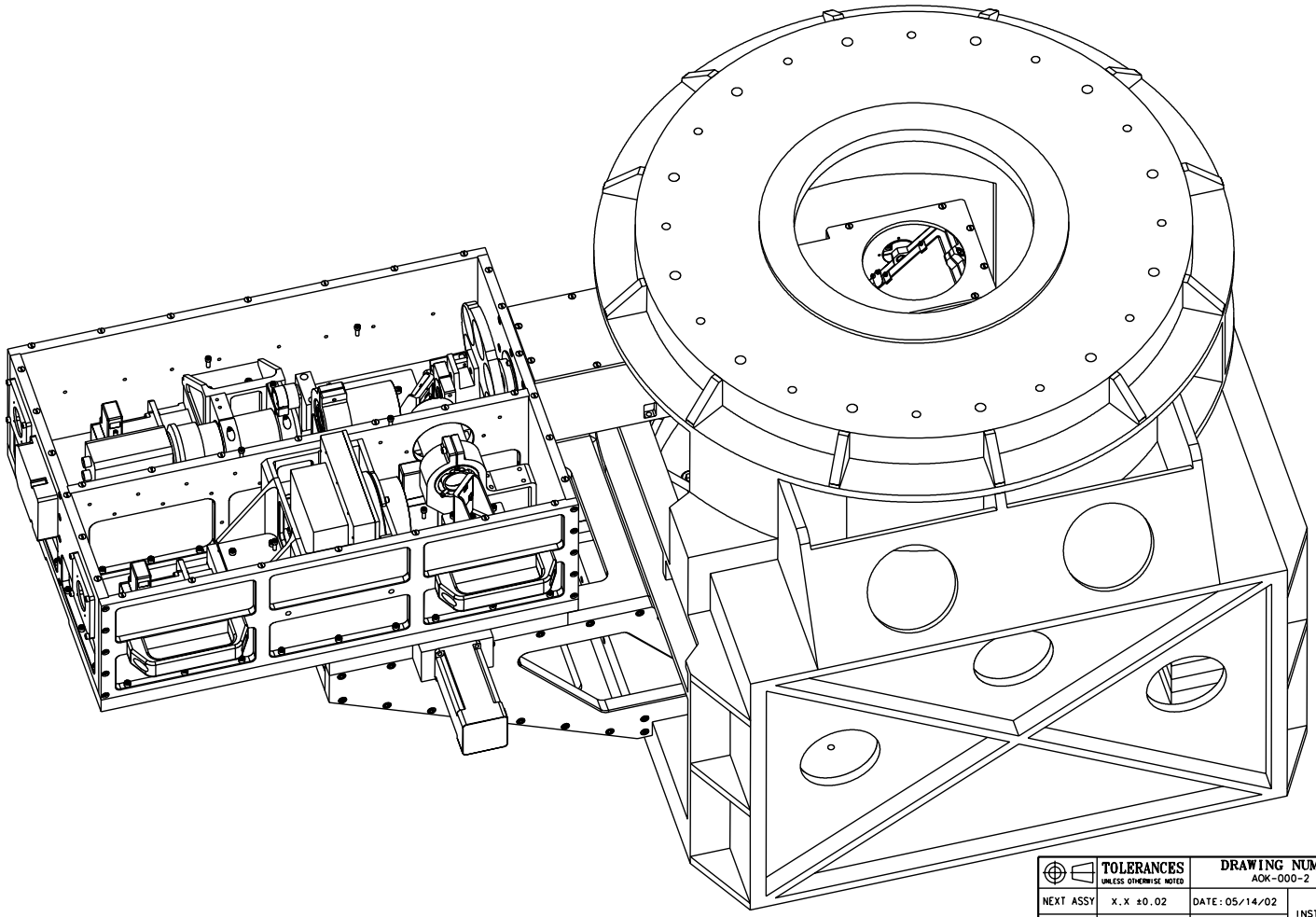

BILL OF MATERIAL

ITEM	Q'TY	DRW. NO.	DESCRIPTION	MATERIAL

	TOLERANCES UNLESS OTHERWISE NOTED	DRAWING NUMBER AOK-000-2		INSTITUTE FOR ASTRONOMY 2680 WOODLAWN DR. HONOLULU, HI 96822
NEXT ASSY	X.X ±0.02	DATE: 05/14/02	NAME: AO ACQUISITION CAMERA	
AOO-000	X.XX ±0.005	DESIGN: VERN S	INSTRUMENT: IRTF AO TELESCOPE: NASA IRTF	
	X.XXX ±0.001	JOS #: 948	SIZE: B	REVISION DATE: REV_DATE
	∠ ±0.5°	MFG:	SCALE: 1:8	SHEET NO. 2 OF 2