BILL OF MATERIAL

ITEM	Q'TY	DRW. NO.	DESCRIPTION	MATERIAL
23	1	AOK-114	spring block	
22	2	pt4-6(berg)	sphere hardened	
21	1	AOK-113	plunger brass	
20	3	AOK-112	pickoff mirror clip	
19	1	AOK-111	outer gimbal hard stop	
18	1	AOK-110	outer gimbal frame	
17	1	AOK-109	outer gimbal actuator mount	
16	2	AOK-108	outer flex pivot support	
15	2	AOK-107	inner gimbal hard stop	
14	1	AOK-106	inner gimbal frame	
13	1	AOK-105	inner gimbal actuator mount	
12	5	8-32 x 3/8	hex socket head	
11	7	8-32 x 3/4	hex socket head	
10	8	6-32 x 1/4	hex socket head	
9	5	4-40 x 3/8	hex socket head	
8	2	10-32 x 3/4	hex socket head	
7	12	10-32 x 1/4	hex socket cup point	
6	2	AOK-104	hardened contact button	
5	4	5016-400(RPLuce.com)	flex pivot	
4	1	mc032g11-b(m&r)	compression spring	
3	2	AOK-103	arched radial spring	
2	1	AOK-102	actuator counter spring	
1	2	cma-12ccc1(newport)	actuator	
Item	Qty	Part #	Name	

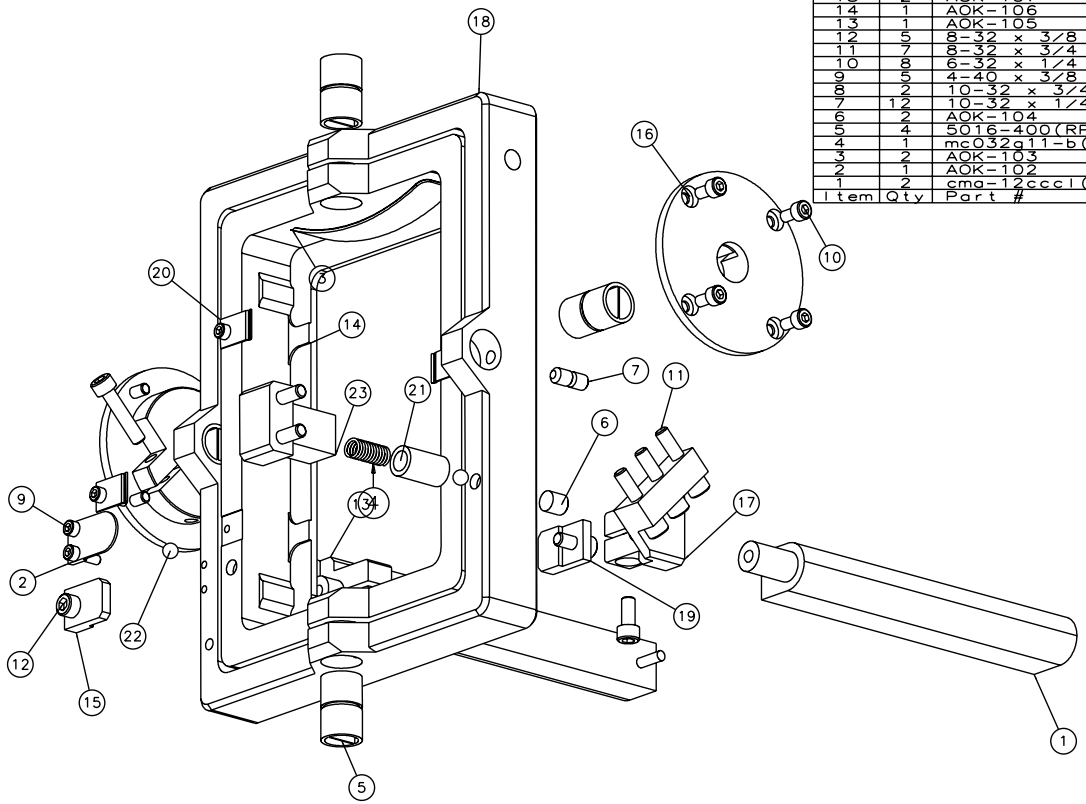

EXPLODED VIEW:SCALE 3/4

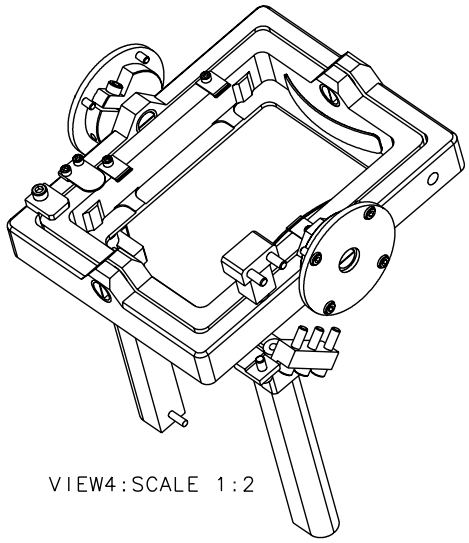

VIEW4:SCALE 1:2

	TOLERANCES UNLESS OTHERWISE NOTED	DRAWING NUMBER AOK-100-1		INSTITUTE FOR ASTRONOMY 2680 WOODLAWN DR. HONOLULU, HI 96822
NEXT ASSY	X.X ±0.02	DATE: 12/21/01	NAME: GIMBAL MOUNT PICKOFF MIRROR	
AOK-000	X.XX ±0.005	DESIGN: VERN S	INSTRUMENT: IRTF AO TELESCOPE: NASA IRTF	
	X.XXX ±0.001	JOS #: 948	SIZE: B	REVISION DATE: REV_DATE
	∠ ±0.5°	MFG:	SCALE: NOTED	SHEET NO. 1 OF 2