BILL OF MATERIAL

ITEM	Q'TY	DRW. NO.	DESCRIPTION	MATERIAL
13	1	s1e6	system1 element6	
12	1	s1e5	system1 element5	
11	1	s1e4	system1 element4	
10	1	s1e3	system1 element3	
9	6	AOK-258	retaining clip	
8	1	AOK-257	radial spring2	
7	1	AOK-256	radial spring1	
6	1	AOK-255	lens spacer2	
5	1	AOK-254	lens spacer1	
4	1	AOK-253	lens retainer2	
3	1	AOK-252	lens retainer1	
2	1	AOK-251	lens cell1	
1	6	4-40 x 3/8	hex socket head	
Item	Qty	Part #	Name	

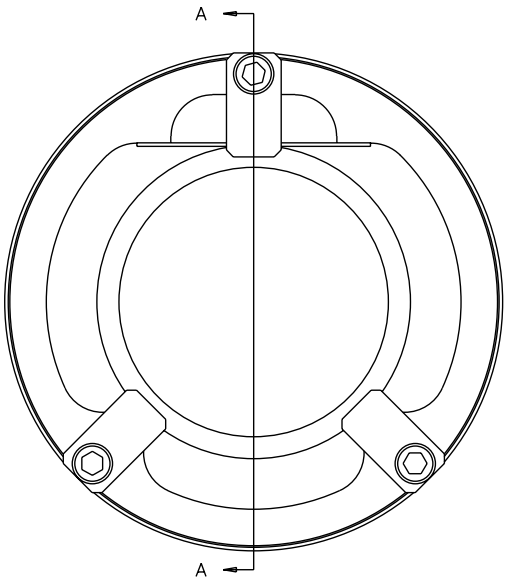

FRONT

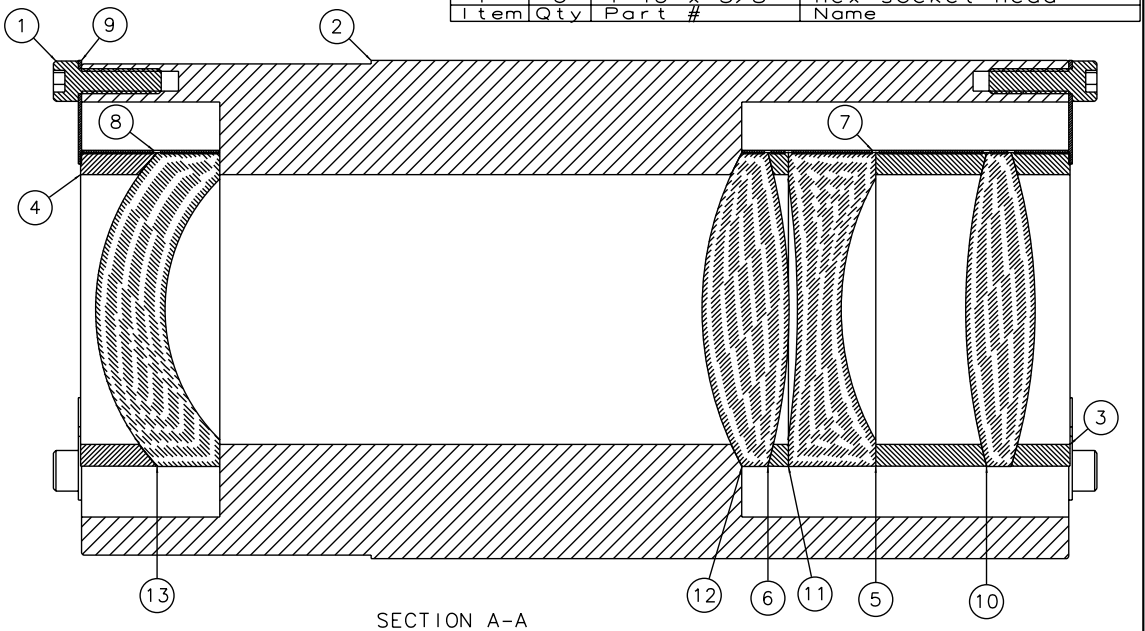

SECTION A-A

	TOLERANCES UNLESS OTHERWISE NOTED	DRAWING NUMBER AOK-250		INSTITUTE FOR ASTRONOMY 2680 WOODLAWN DR. HONOLULU, HI 96822
NEXT ASSY	X.X ±0.02	DATE: 01/30/02	NAME: LENSMOUNT SYSTEM1	
AOK-200	X.XX ±0.005	DESIGN: VERN S	INSTRUMENT: IRTF AO TELESCOPE: NASA IRTF	
	X.XXX ±0.001	JOS #: 948	SIZE: B	REVISION DATE: REV_DATE
	∠ ±0.5°	MFG:	SCALE: 2:1	SHEET NO. 1 OF 1