BILL OF MATERIAL				
ITEM	Q'TY	DRW. NO.	DESCRIPTION	MATERIAL

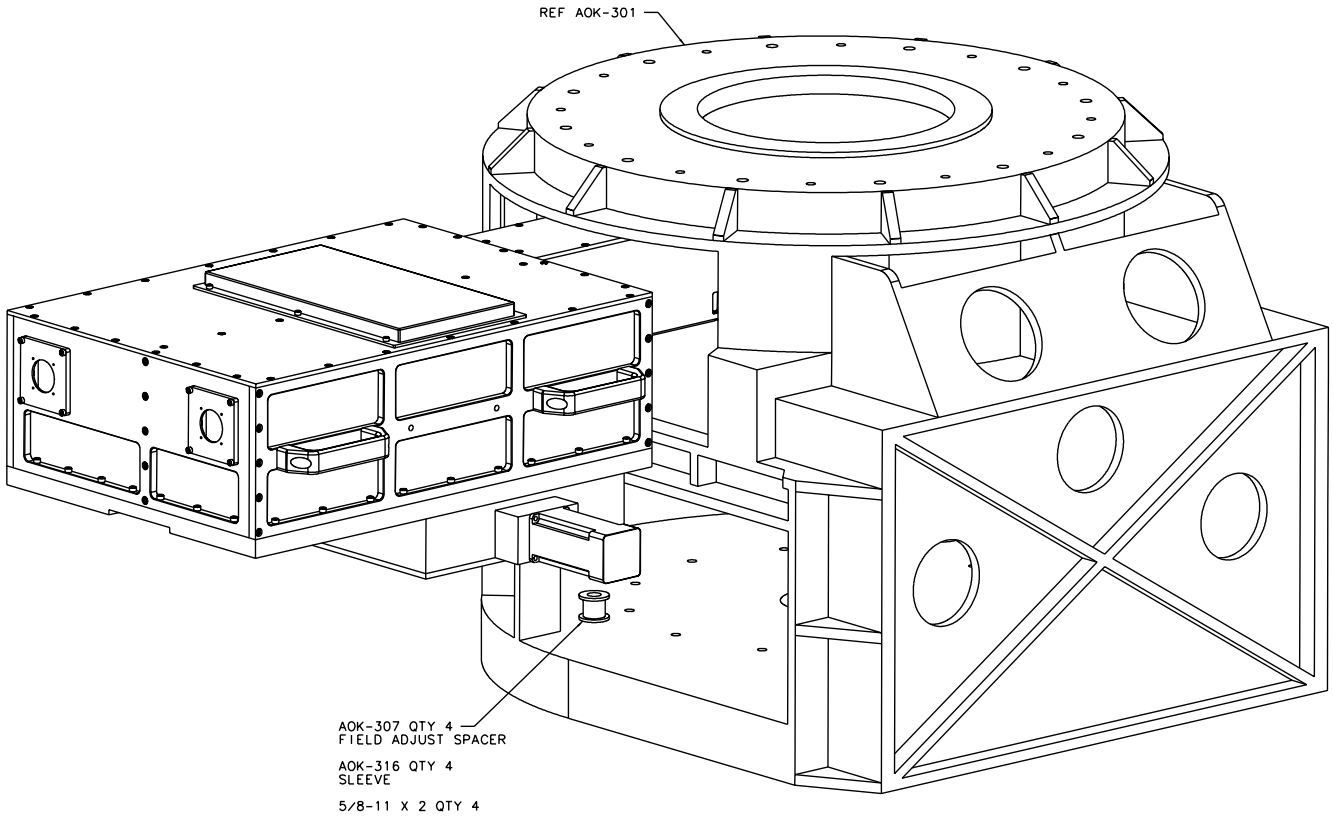

VIEW1:SCALE 1/5
SEE ALSO AOK-000-1,2 AND 3

	TOLERANCES UNLESS OTHERWISE NOTED	DRAWING NUMBER AOK-300-2		INSTITUTE FOR ASTRONOMY 2680 WOODLAWN DR. HONOLULU, HI 96822
NEXT ASSY	X.X ±0.02	DATE: 12/14/01	NAME: SUPPORT STRUCTURE	
AOK-000	X.XX ±0.005	DESIGN: VERN S	INSTRUMENT: IRTF AO TELESCOPE: NASA IRTF	
	X.XXX ±0.001	JOS #: 948	SIZE: B	REVISION DATE: REV_DATE
	∠ ±0.5°	MFG:	SCALE: NOTED	SHEET NO. 2 OF 3