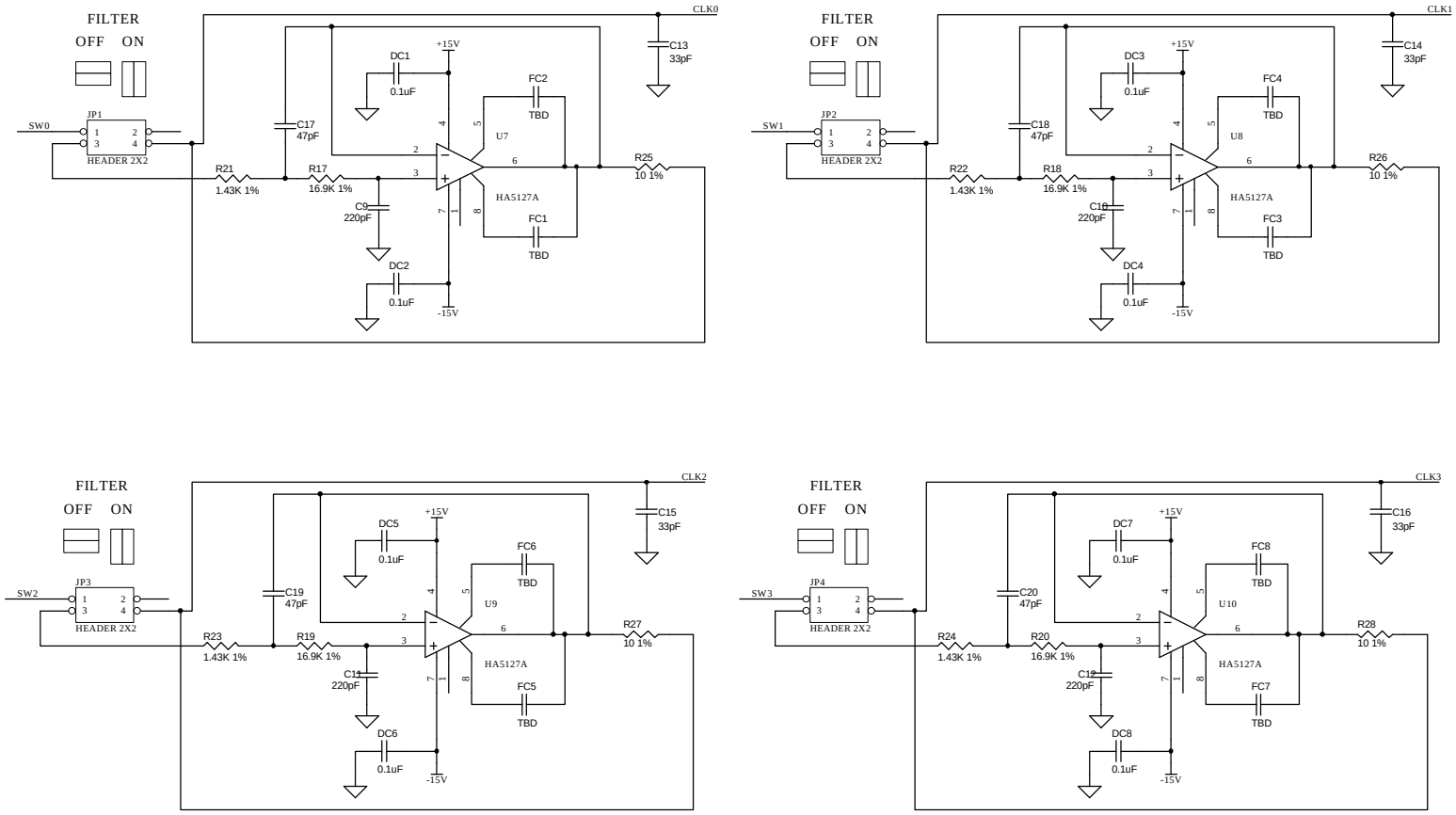

Title	CLOCK DRIVER ADD-ON BOARD	
Size B	Number	Revision PROTO
Date: 24-Feb-1997	Sheet 2 of 2	
File: O:\PROTEL\SPEX\CLKBIAS\CLKDRV2.SCH	Drawn By:	