BILL OF MATERIAL				
ITEM	Q'TY	DRW. NO.	DESCRIPTION	MATERIAL

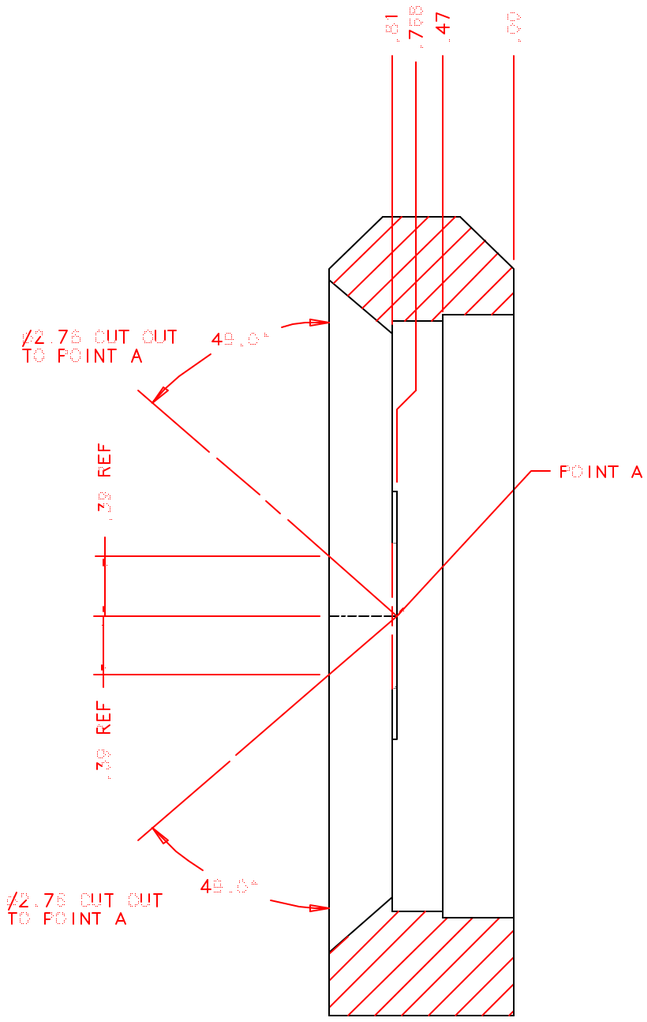

SECTION A - A

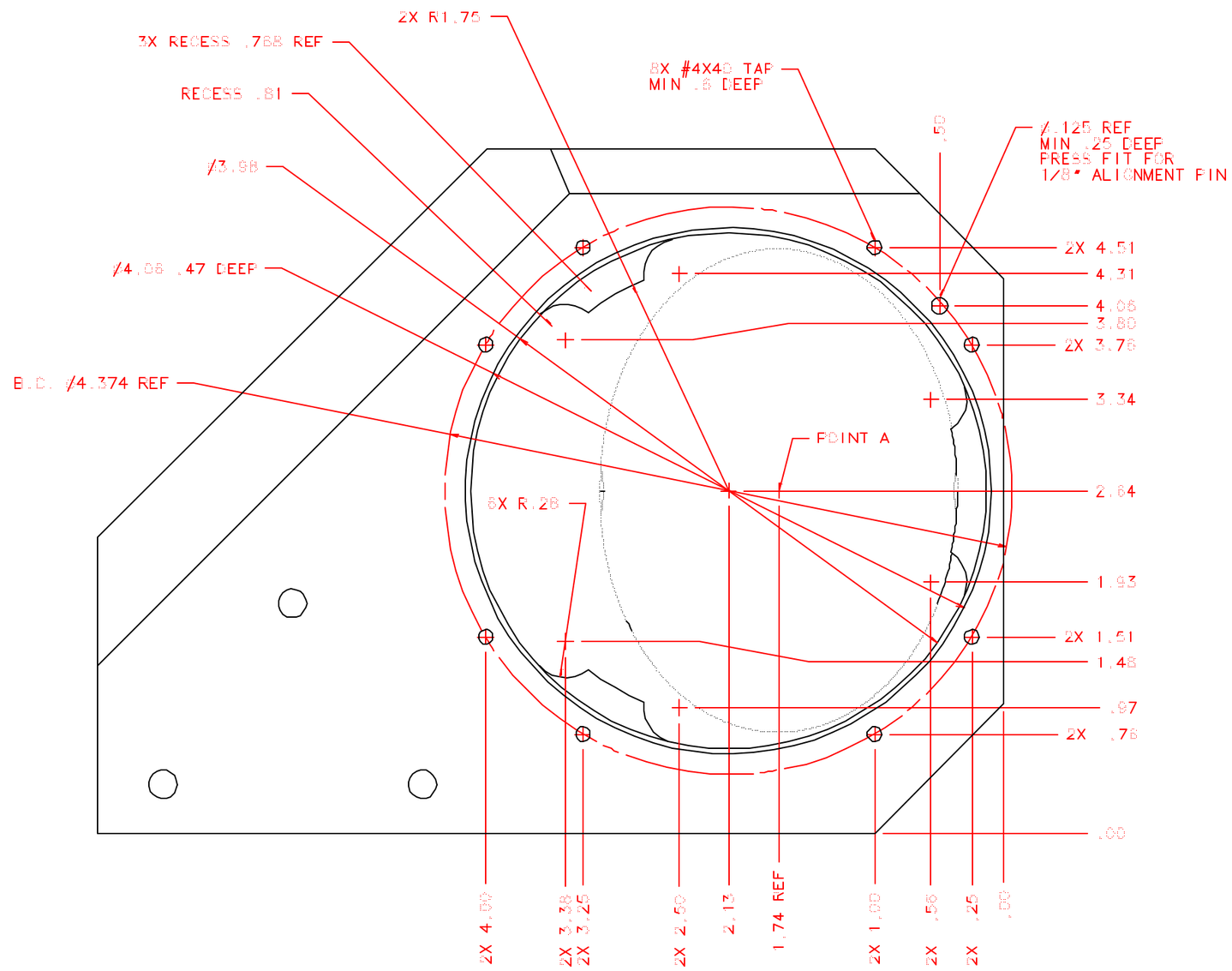

	TOLERANCES UNLESS OTHERWISE NOTED	DRAWING NUMBER SAI-013-2	INSTITUTE FOR ASTRONOMY 2680 WOODLAWN DR. HONOLULU, HI 96822	
NEXT ASSY	X.X ±0.02	DATE: 08/23/99	NAME: FLOKOFF MIRROR PLATE	
SAI-001	X.XX ±0.005	DESIGNED: NEILL	INSTRUMENT: SPEX TELESCOPE: IRTF	
	X.XXX ±0.001	JOB #:	SIZE: B	REVISION DATE: FINAL
	∠ ±0.5°	MFG:	SCALE: 1:1	SHEET NO. 2 OF 3