BILL OF MATERIAL				
ITEM	Q'TY	DRW. NO.	DESCRIPTION	MATERIAL

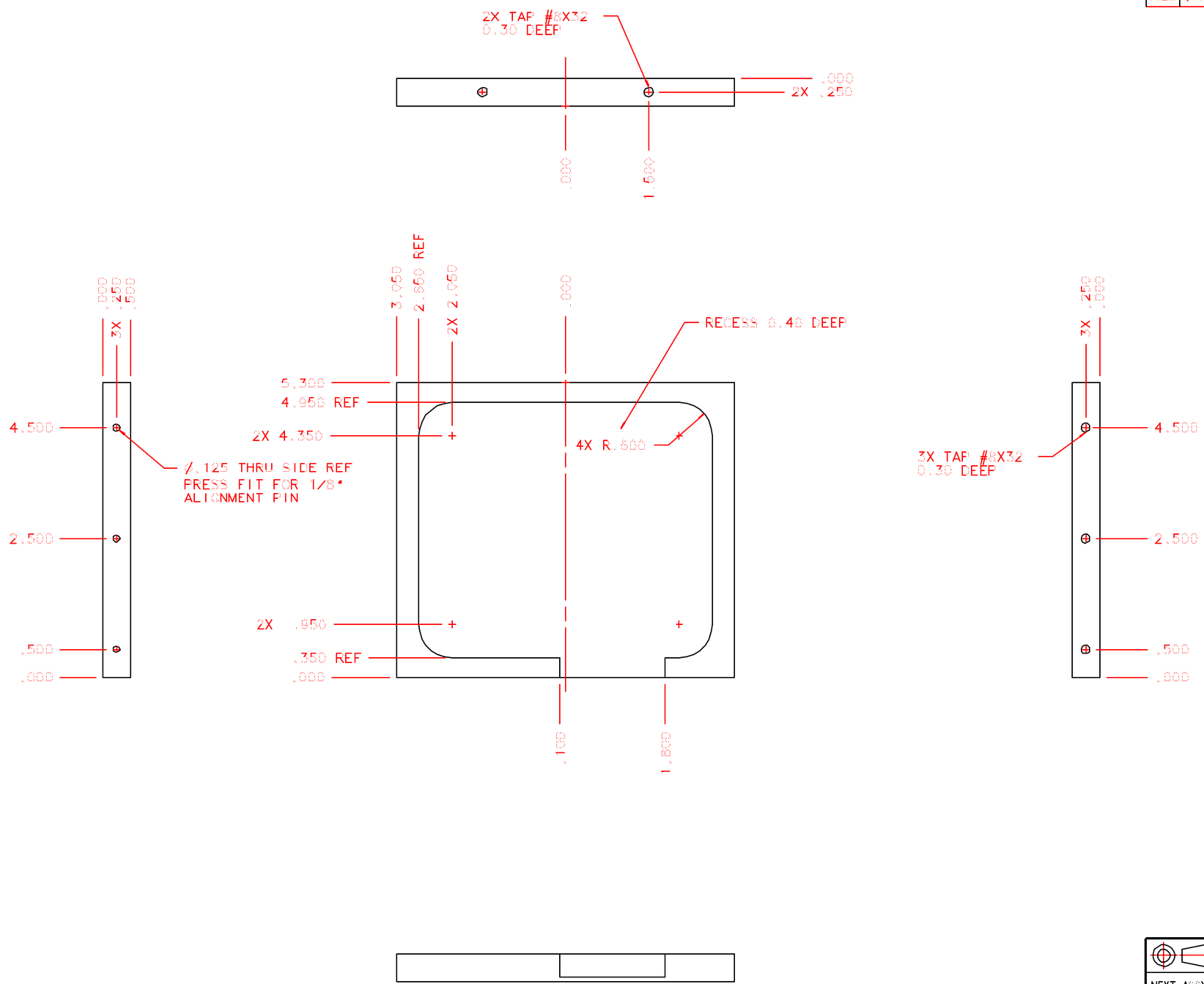

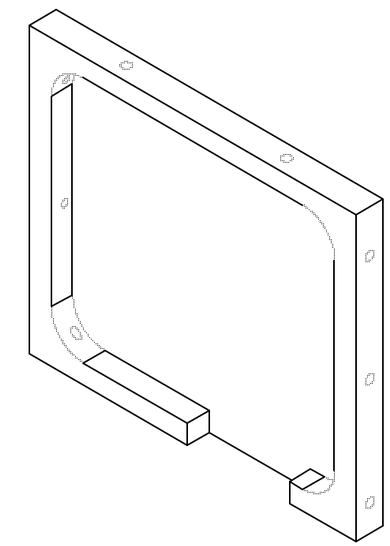

MATERIAL: ALUM 6061-T6
QUANTITY: ONE

	TOLERANCES UNLESS OTHERWISE NOTED	DRAWING NUMBER SAB-012		INSTITUTE FOR ASTRONOMY 2680 WOODLAWN DR. HONOLULU, HI 96822
NEXT ASSY	X.X ±0.02	DATE: 11/01/99	NAME: CB LIGHT BOX SIDE 2	
SAB-001	X.XX ±0.005	DESIGN: D. NEILL	INSTRUMENT: SPEX TELESCOPE: IRTF	
	X.XXX ±0.001	JOB #:	SIZE: B	REVISION DATE: FINAL
	∠ ±0.5°	MFG:	SCALE: 1:2	SHEET NO. 1 OF 1