NOTES: UNLESS OTHERWISE NOTED

1. MACHINED SURFACE ROUGHNESS 64
   O-RING GROOVES AND SURFACES 32
2. REMOVE ALL BURRS/SHARP CORNERS

BILL OF MATERIAL				
NO.	REQ'D	REF DRW	DESCRIPTION	MATERIAL
N/A	1	SLO-021B	HOGGED CRYOGEN CAN	ALU 2219

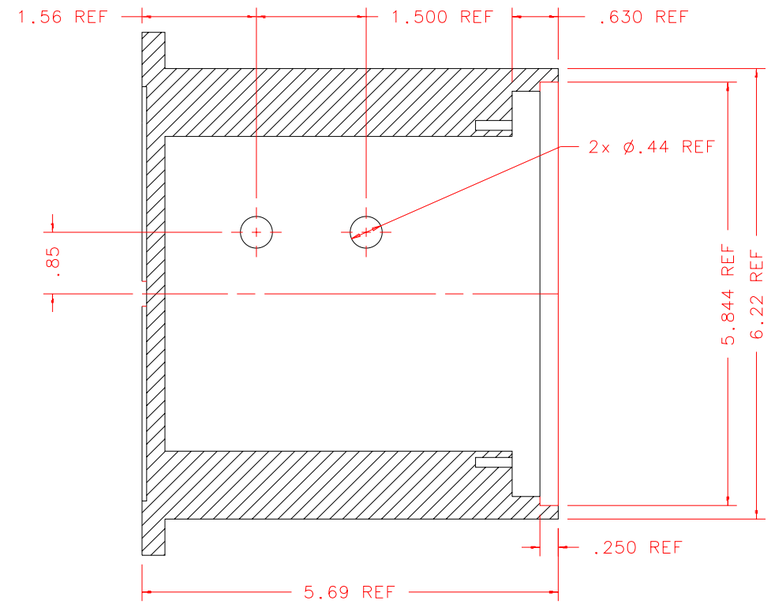

SECTION A-A
SCALE 1:2

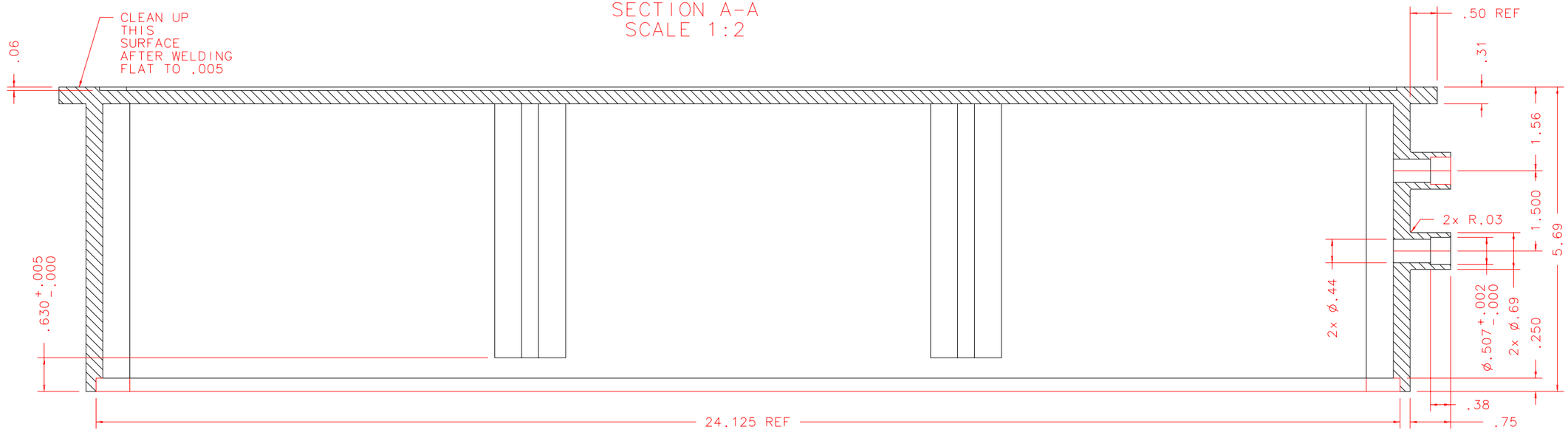

SECTION B-B: SCALE 1:2

REVDATE: N/A	REVISION: N/A		
DATE: 09/17/98	INSTITUTE FOR ASTRONOMY 2680 WOODLAWN DR. HONOLULU, HI 96822		
DESIGN: STAHLBERGER			
DRAWN: STAHLBERGER	INSTRUMENT: SPEX - CROSS DISPERSED SPECTROGRAPH		
APPR'D: J. RAYNER	PART NAME: HOGGED CRYOGEN CAN		
TOLERANCES	TELESCOPE: IRTF		
X.X +/- .015 X.XX +/- .005 X.XXX +/- .002 ANGLE +/- 30 min FRACTION +/- 1/32	DRW NO: SLO-021B		SCALE: NOTED
SLO-001B	SIZE: B	JOS NO: 725	SHEET: 3 OF 4
NEXT ASSY			

PLOT: 10/19/99