NOTES: UNLESS OTHERWISE NOTED

1. MACHINED SURFACE ROUGHNESS 64
   O-RING GROOVES AND SURFACES 32
2. REMOVE ALL BURRS/SHARP CORNERS

BILL OF MATERIAL				
NO.	REQ'D	REF DRW	DESCRIPTION	MATERIAL
N/A	1	SMO-034A	FOCAL PLANE BLANKOFF	ALU 6061-T6

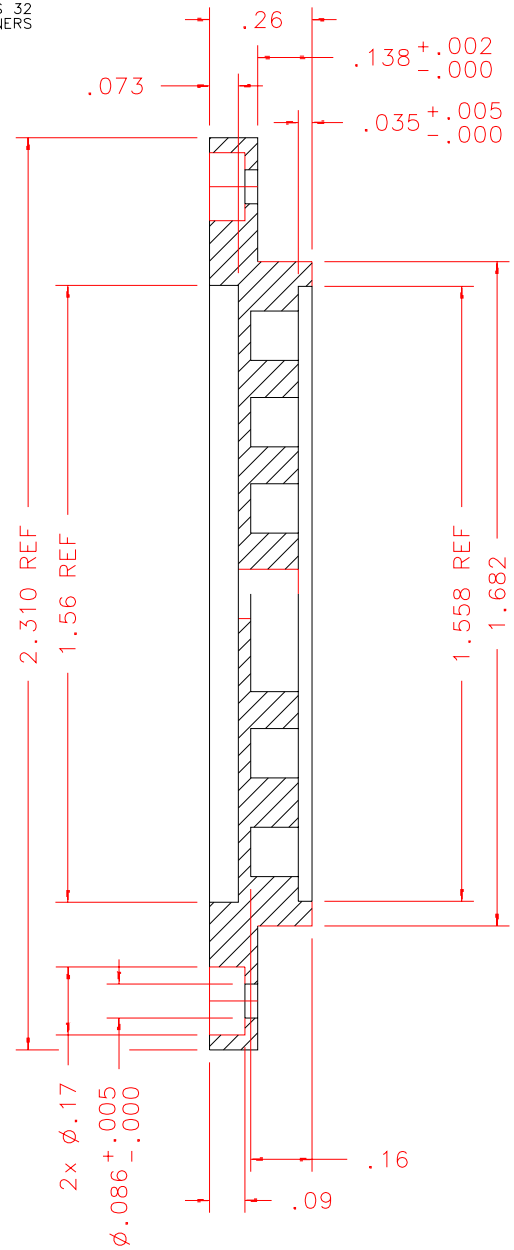

SECTION A-A:SCALE 2:1

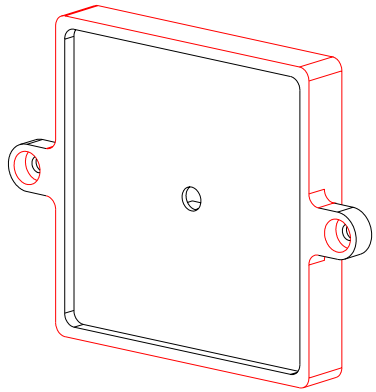

ISOVIEW 5:SCALE FULL

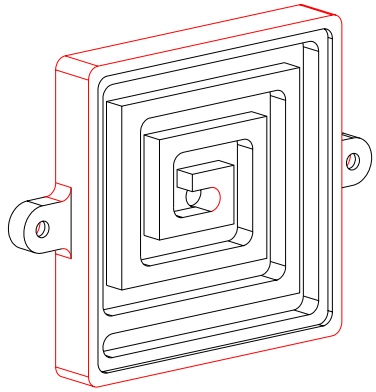

ISOVIEW 4:SCALE FULL

REVDATE: N/A	REVISION: N/A
DATE: 10/20/98	INSTITUTE FOR ASTRONOMY
DESIGN: STAHLBERGER	2680 WOODLAWN DR. HONOLULU, HI 96822
DRAWN: STAHLBERGER	INSTRUMENT: SPEX - CROSS DISPERSED SPECTROGRAPH
APPR'D: J. RAYNER	PART NAME: FOCAL PLANE BLANKOFF
	TELESCOPE: IRTF

TOLERANCES

X.X	+/- .015
X.XX	+/- .005
X.XXX	+/- .002
ANGLE	+/- 30 min
FRACTION	+/- 1/32

DRW NO: SMO-034A		SCALE: NOTED
SIZE: A	JOS NO: 725	SHEET: 2 OF 2

SMO-001B
NEXT ASSY

PLOT: 10/19/99