NOTES: UNLESS OTHERWISE NOTED

1. MACHINED SURFACE ROUGHNESS 64
   O-RING GROOVES AND SURFACES 32
2. REMOVE ALL BURRS/SHARP CORNERS

BILL OF MATERIAL

NO.	REQ'D	REF DRW	DESCRIPTION	MATERIAL
N/A	2	SMO-036A	PRESSURE PLATE	ALU 6061-T6

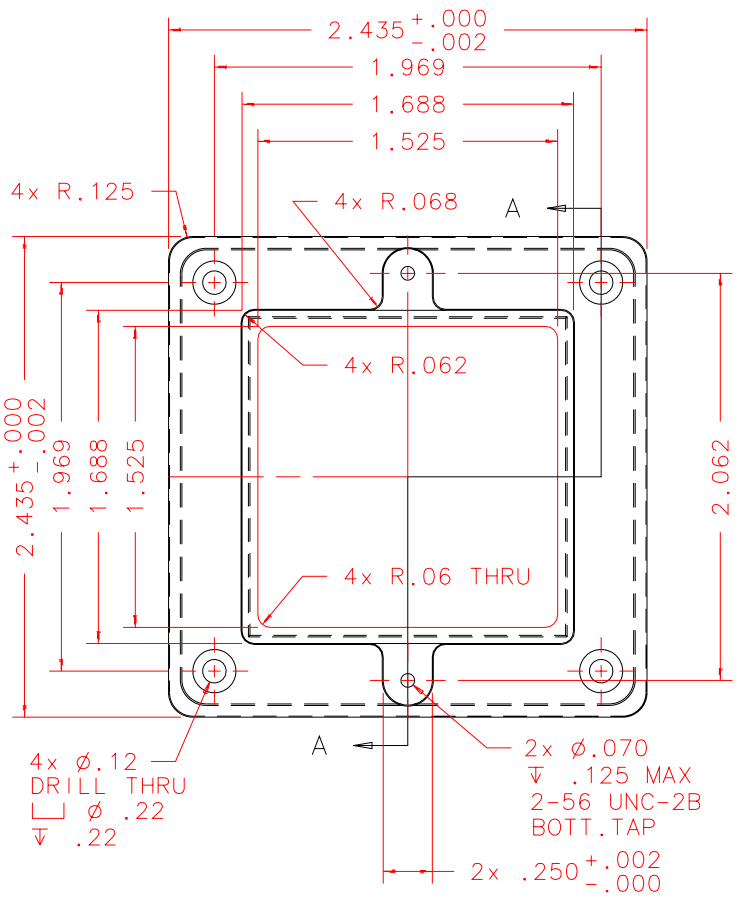

FRONT

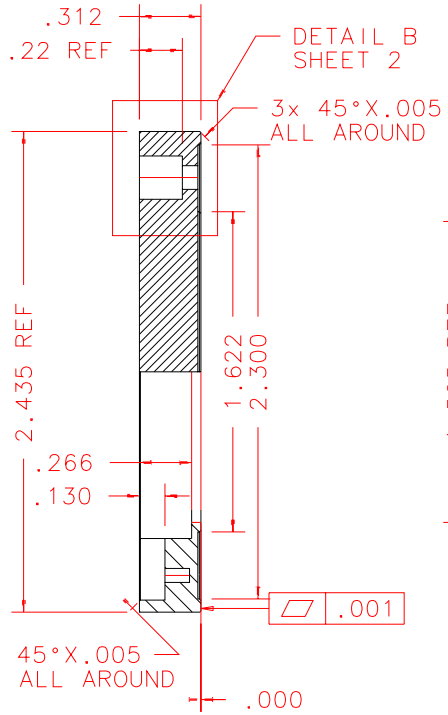

SECTION A-A

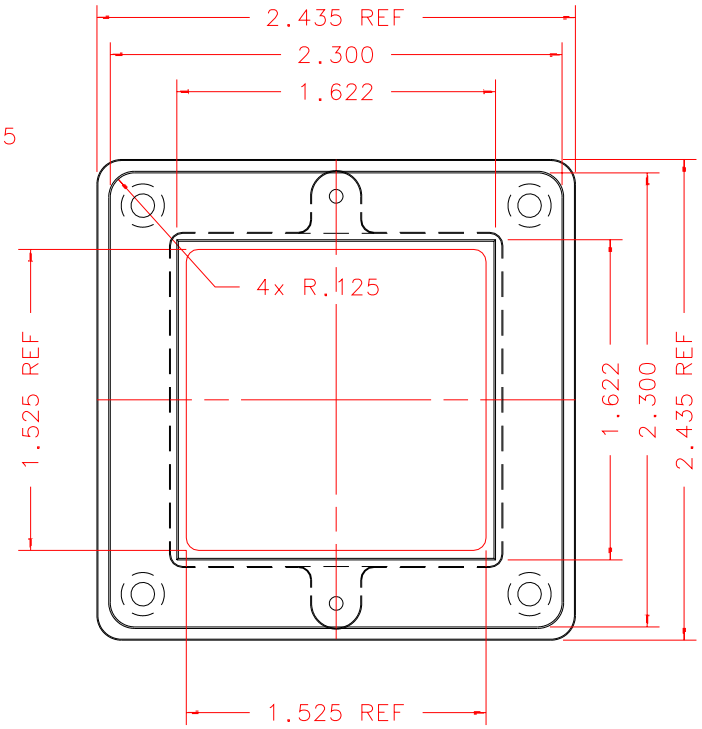

BACK

REVDATE: N/A	REVISION: N/A
DATE: 10/15/98	INSTITUTE FOR ASTRONOMY
DESIGN: STAHLBERGER	2680 WOODLAWN DR. HONOLULU, HI 96822
DRAWN: STAHLBERGER	INSTRUMENT: SPEX - CROSS DISPERSED SPECTROGRAPH
APPR'D: J. RAYNER	PART NAME: PRESSURE PLATE
	TELESCOPE: IRTF

TOLERANCES

X.X	+/- .015
X.XX	+/- .005
X.XXX	+/- .002
ANGLE	+/- 30 min
FRACTION	+/- 1/32

DRW NO: SMO-036A		SCALE: 1:1
SIZE: A	JOS NO: 725	SHEET: 1 OF 2

SMO-001B	
NEXT ASSY	

PLOT: 10/19/99