NOTES: UNLESS OTHERWISE NOTED

1. MACHINED SURFACE ROUGHNESS 64
   O-RING GROOVES AND SURFACES 32
2. REMOVE ALL BURRS/SHARP CORNERS

BILL OF MATERIAL				
NO.	REQ'D	REF DRW	DESCRIPTION	MATERIAL
N/A	1	SF8-029A	SHIELD PLATE -Y INSERT	ALU 6061-T6

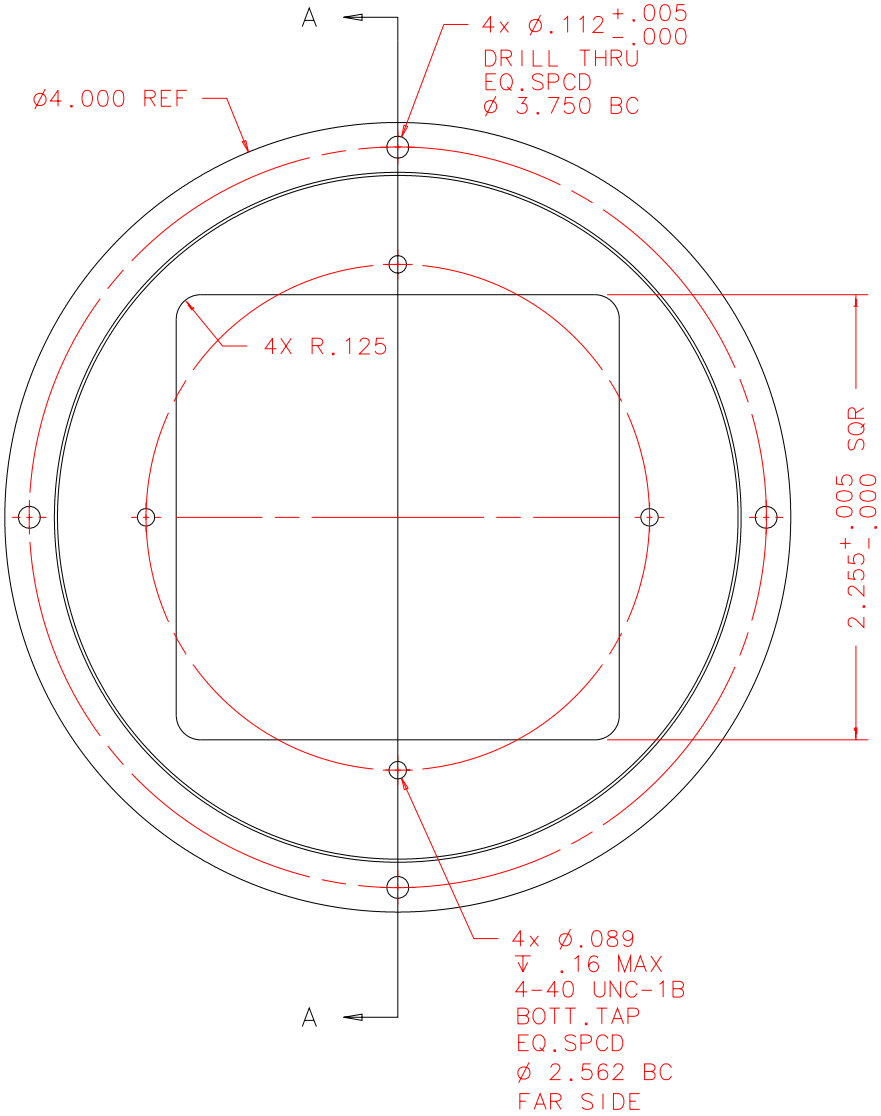

FRONT

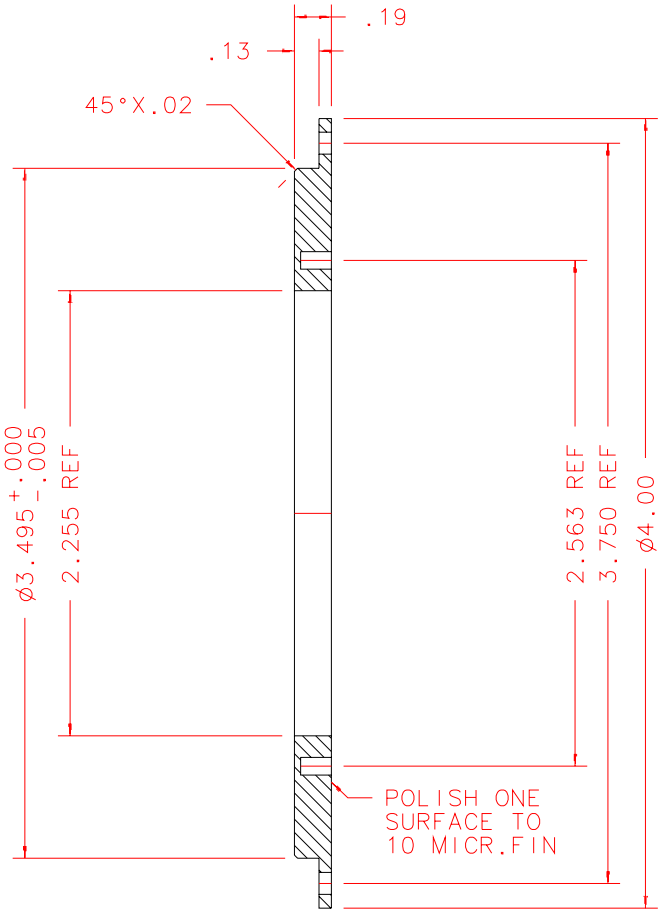

SECTION A-A

REVDATE: N/A	REVISION: N/A		
DATE: 01/04/99	INSTITUTE FOR ASTRONOMY 2680 WOODLAWN DR. HONOLULU, HI 96822		
DESIGN: STAHLBERGER			
DRAWN: STAHLBERGER	INSTRUMENT: SPEX - CROSS DISPERSED SPECTROGRAPH		
APPR'D: J. RAYNER	PART NAME: SHIELD PLATE -Y INSERT		
TOLERANCES	TELESCOPE: IRTF		
X.X +/- .015 X.XX +/- .005 X.XXX +/- .002 ANGLE +/- 30 min FRACTION +/- 1/32	DRW NO: SF8-029A		SCALE: 1:1
	SIZE: A	JOS NO: 725	SHEET: 1 OF 1

SF8-001B
NEXT ASSY

PLOT: 10/19/99