NOTES: UNLESS OTHERWISE NOTED

1. MACHINED SURFACE ROUGHNESS 64
   O-RING GROOVES AND SURFACES 32
2. REMOVE ALL BURRS/SHARP CORNERS

BILL OF MATERIAL

NO.	REQ'D	REF DRW	DESCRIPTION	MATERIAL
N/A	1	SP3-012A	DETENT ARM	TITANIUM 6AL-4V

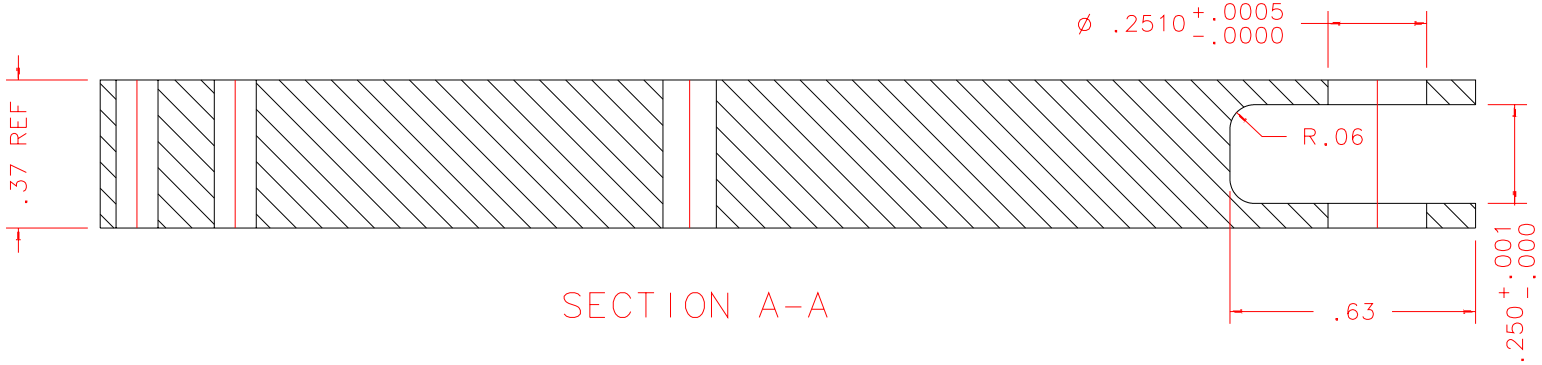

SECTION A-A

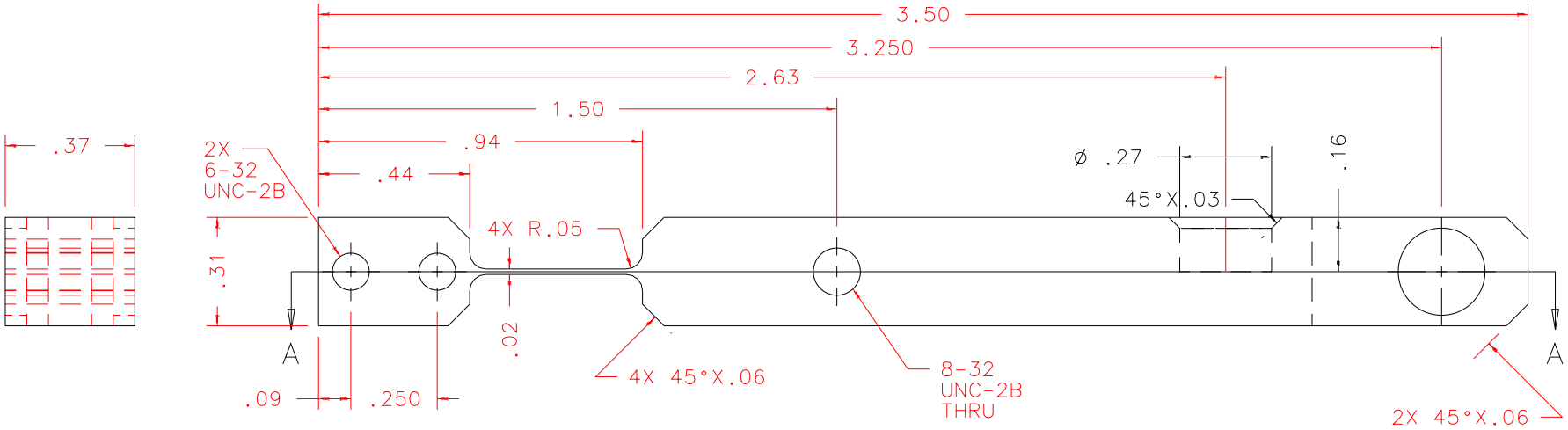

FRONT

RIGHT:SCALE 2:1

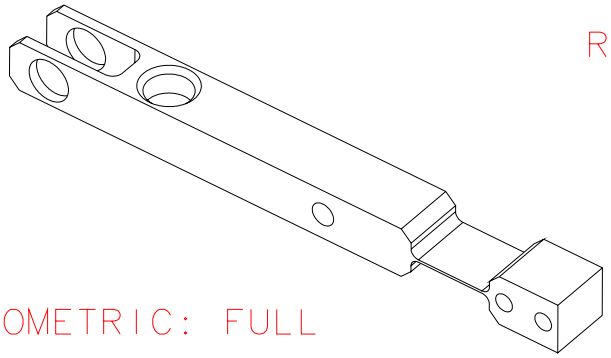

ISOMETRIC: FULL

REVDATE: 09/11/98	REVISION: ADD .27 DIA SPRING HOLE
REVDATE: N/A	REVISION: N/A
DATE: 05/01/97	INSTITUTE FOR ASTRONOMY
DESIGN: STAHLBERGER	2680 WOODLAWN DR. HONOLULU, HI 96822
DRAWN: STAHLBERGER	INSTRUMENT: SPEX - CROSS DISPERSED SPECTROGRAPH
APPR'D: J. RAYNER	PART NAME: DETENT ARM
TOLERANCES	TELESCOPE: IRTF
X.X +/- .015	
X.XX +/- .005	
X.XXX +/- .002	DRW NO: SP3-012A — SCALE: NOTED
ANGLE +/- 30 min	
FRACTION +/- 1/32	SIZE: A — JOS NO: 725 — SHEET: 1 OF 1

SP3-001A	
NEXT ASSY	

PLOT: 10/19/99