NOTES: UNLESS OTHERWISE NOTED

1. MACHINED SURFACE ROUGHNESS 64
   O-RING GROOVES AND SURFACES 32
2. REMOVE ALL BURRS/SHARP CORNERS

BILL OF MATERIAL				
NO.	REQ'D	REF DRW	DESCRIPTION	MATERIAL
N/A	1	SG13-014A	HALL ACCESS COVER OS1	ALU 6061-T6

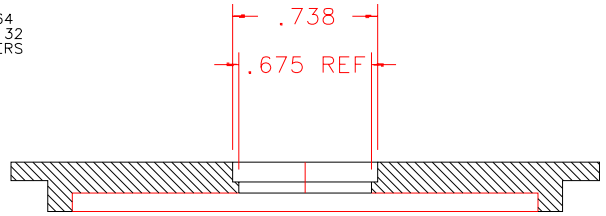

SECTION B-B

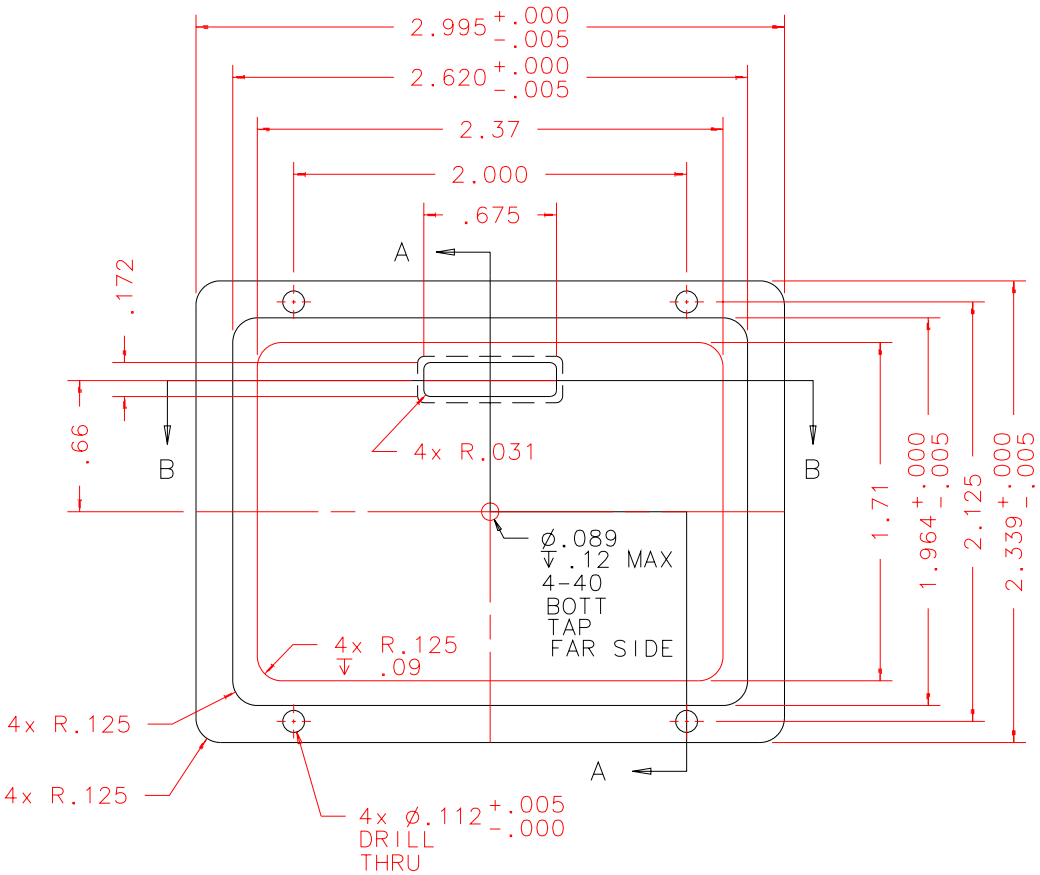

FRONT

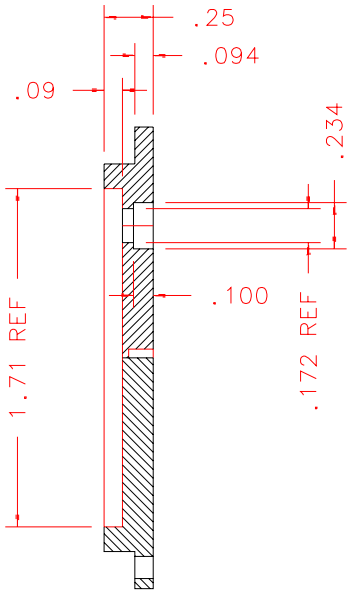

SECTION A-A

REVDATE: 02/06/99	REVISION: ADD 4-40 HOLE
REVDATE: N/A	REVISION: N/A
DATE: 05/09/98	INSTITUTE FOR ASTRONOMY
DESIGN: STAHLBERGER	2680 WOODLAWN DR. HONOLULU, HI 96822
DRAWN: STAHLBERGER	INSTRUMENT: SPEX - CROSS DISPERSED SPECTROGRAPH
APPR'D: J. RAYNER	PART NAME: HALL ACCESS COVER OS1
	TELESCOPE: IRTF

TOLERANCES	
X.X	+/- .015
X.XX	+/- .005
X.XXX	+/- .002
ANGLE	+/- 30 min
FRACTION	+/- 1/32

DRW NO: SG13-014A		SCALE: 1:1
SIZE: A	JOS NO: 725	SHEET: 1 OF 1

SG13-001B
NEXT ASSY

PLOT: 10/19/99