BILL OF MATERIAL				
ITEM	QTY.	DESCRIPTION	MATERIAL	NOTE
1	1	56.5 x 48.25 x 6.35 Plate	ALUM 6061	

NOTES:

1. REMOVE ALL BURRS AND SHARP EDGES

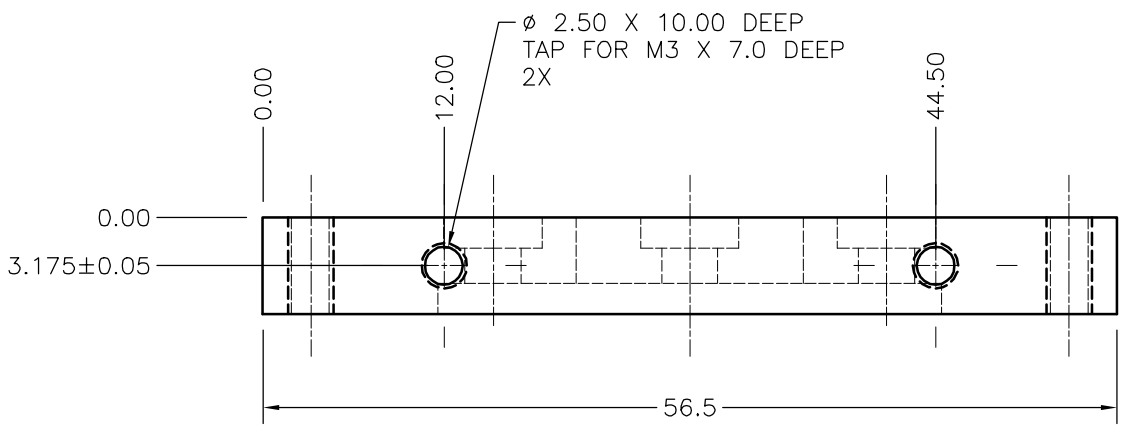

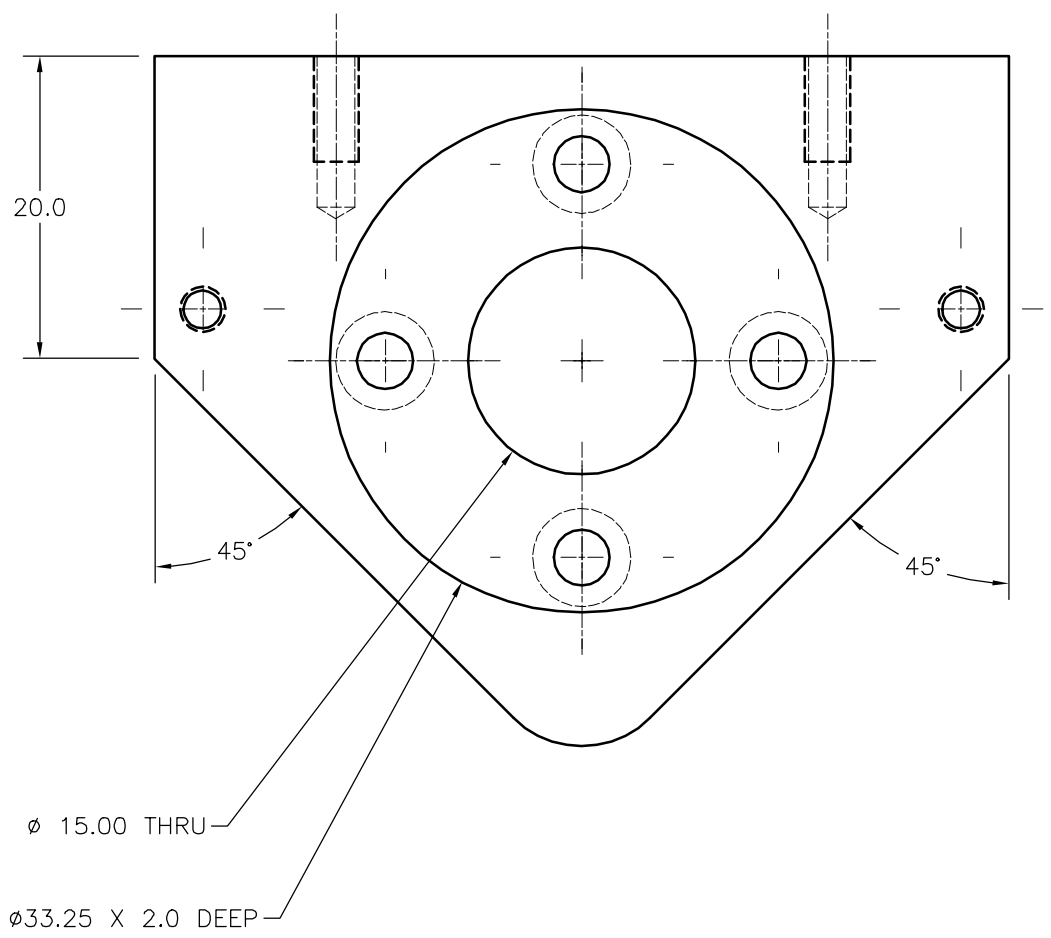

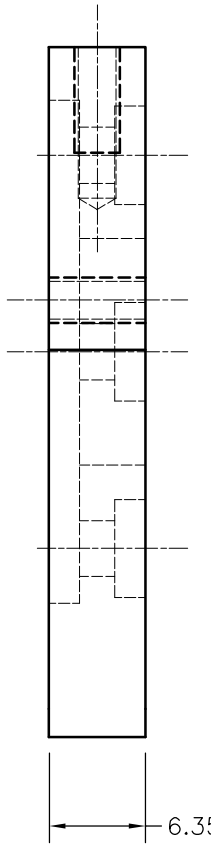

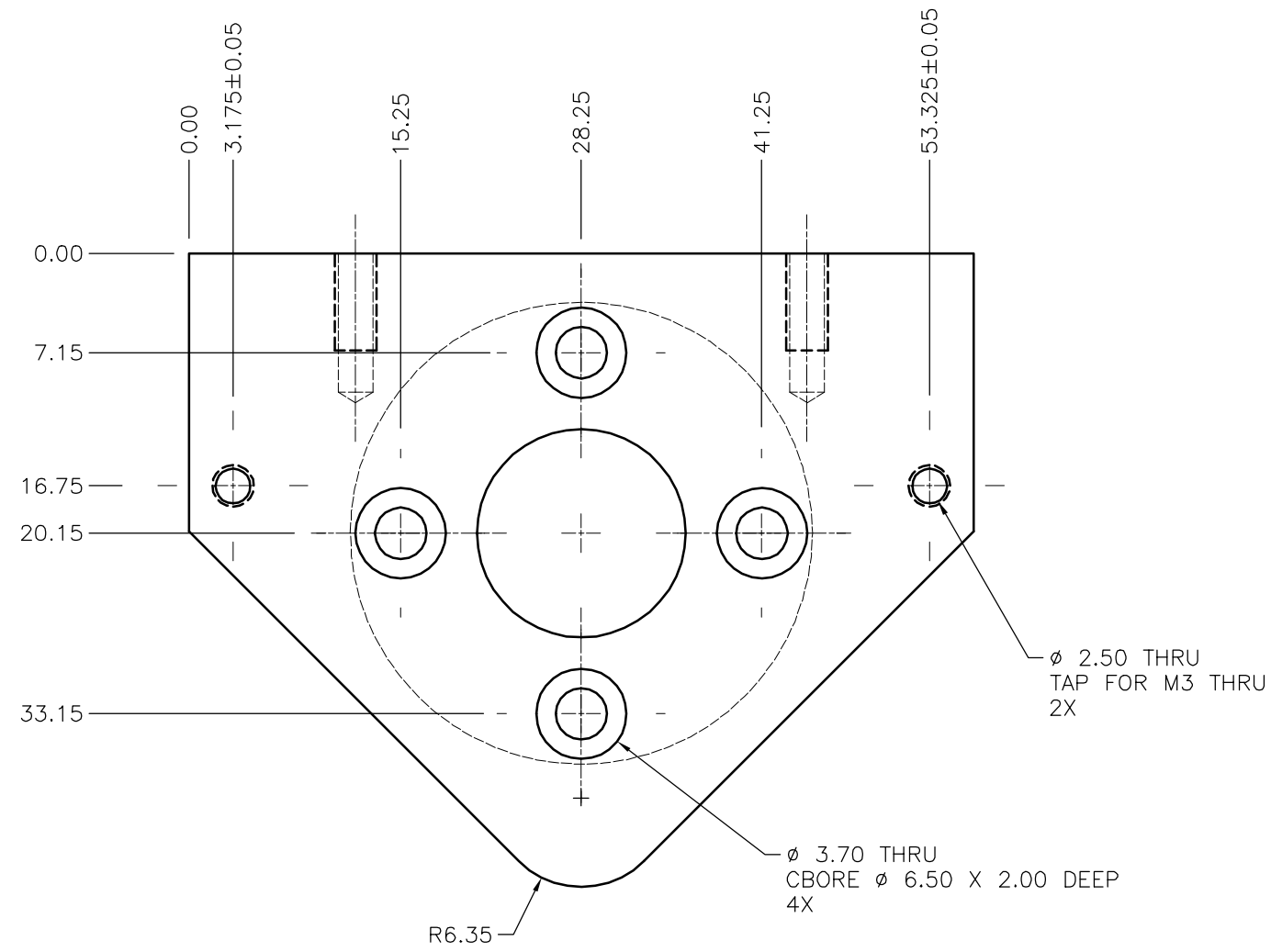

REV	LOC	DESCRIPTION	BY	DATE
1		REVIEWED & ISSUED	TB	Dec 11/03

REVISION

UNLESS OTHERWISE STATED
ALL DIMENSIONS IN MILLIMETERS

TOLERANCES

X.	± 0.500
X.X	± 0.100
X.XX	± 0.050
X.XXX	± 0.010
ANGLE	± 0°30'

MACHINING FINISH

N7 – 1.6µM – 63µIN

EDGE BREAK

0.3mm x 45°

PROJECTION

NASA INFARED TELESCOPE FACILITY
Institute for Astronomy
University of Hawaii

2680 Woodlawn Drive
Honolulu, HI, 96822

PROJECT: TCS3 LAB MODEL

TITLE: T Axis Assembly
Encoder Block

DESIGNED	DRAWN	CHECKED	SCALE	DWG. No.	REV
TB	TB	TB	2:1	2127	1.0
DATE Dec 03	DATE Dec 03	DATE Dec 11/03			

B–SHEET.dwg